MINMILE
Smart Technology



Model Identification

MEC-0601 – A – B

A：Color

Color	Red	Green	Yellow
	White	Blue	Two colors
Code	R	G	Y
	W	B	S
Diagrams			

Note:Double colors with strobe function can be selected according to needs of users.

B: Voltage(Voltage can be indicated directly such as AC220 ， DC24，AC380…..)

For example: Explosion-proof indicator with white color and voltage AC220V, the model is MEC-0601-W-AC220.

General Technical Parameters

Applicable equipment and description	Used for the indication of the explosion-proof box (Ex db); Certified for Ex components and cannot be used alone;
Explosion protection Gas explosion protection Dust explosion protection	GB/IECEx：Ex db ⅡC Gb Ex tb ⅢC Db ATEX: Ⅱ2 G Ex db ⅡC Gb Ⅱ2 D Ex tb ⅢC Db
Conformity to standards	GB：GB/T 3836.1-2021,GB/T 3836.2-2021,GB/T 3836.31-2021 IECEx：IEC 60079-0:2017,IEC 60079-1:2014-06,IEC 60079-31:2013 ATEX：EN IEC 60079-0:2018, EN IEC 60079-1:2014,EN IEC60079-31:2014
Enclosure Material	Enclosure and transparent cover：PC
Rated voltage and power	Voltage:AC220-240V，AC380V，DC220V，AC/DC110V，DC12V，DC24V，DC48V， Other voltages can be customized Power：＜0.5W
Anti-interference voltage	50V:AC/DC110V 110V:AC/DC220V、AC/DC380V
Service Temp. IP and Anti-corrosion rate	-60°C~+100°C，IP66、WF2
weight(kg)	0.03
Wiring diameter	0.5~2.5 mm²
Wiring schematic diagram	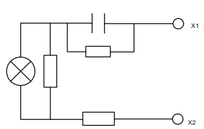 Single color indicator 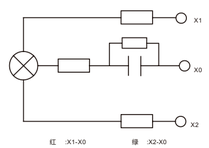 Double color indicator

- Product appearance and installation schematic

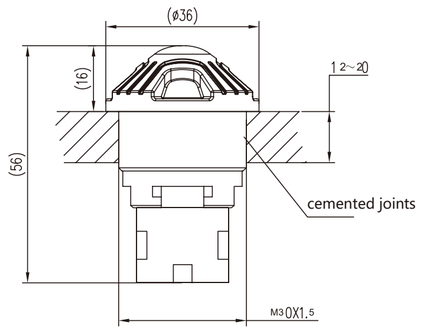

Product Features

Note: The model of the dedicated indicator element is set to CP0602. The specific parameter selection is the same as MEC-0602.

- High light transmittance PC cover, special low-temperature resistant and explosion-proof material
- Dedicated indicator element CP0502, different voltage, color and dual color strobe are available according to requirements



